Component Selection

COMBIWOOD GROUP



PRODUCT

CATALOGUE

Custom Timber Components
for Industrial Applications

FINGER-JOINTED

GLUED LAMINATED

COMBIWOOD GROUP
COMPONENT CATALOGUE

All information, visuals, dimensions presented in this catalogue are for reference purposes only.

Product finishes, specifications and availability may change without prior notice. Actual colours may vary from printed samples due to material and printing limitations. Combiwood Group assumes no liability for typographical or photographic errors.

Timber Component Selection

This catalogue presents a selection of wood components produced within the **Combiwood Group**.



Contents

ABOUT COMBIWOOD GROUP 4

PRODUCTION 5

TIMBER COMPONENTS

- Finger-Jointed 8
- C24 Finger-Jointed Solid 10
- Finger-Jointed Glued-Laminated 12
- Solid Laminated 14
- Non-Visible Construction 16
- HDF Covered 18

PRODUCT GALLERY 20

CUSTOM SOLUTIONS 24

CERTIFICATIONS 25

About the **Group**

At Combiwood Group, we bring together a network of woodworking companies under one roof. From responsible sourcing and sawmilling to component manufacturing and interior solutions, we ensure quality, traceability and efficiency at every stage. Operating as a unified system and sharing expertise across our companies, we deliver results that meet global demands.

Our key component factories, Vincom, Ecobirch and Puit-Profiil, specialise in finger-jointed and laminated timber components. We work primarily with pine and spruce, while maintaining flexibility for other suitable species. Our timber components serve a wide range of industries, including window, door and moulding production.

We manage the entire valve chain

SOURCING | SAWMILLING | COMPONENTS | INTERIOR PRODUCTS | SALES & LOGISTICS

Discover the Members of the Group

Production Units

With all production sites located within a 200 km radius in Estonia, we maintain efficient logistics, centralised quality control and seamless coordination across our facilities.

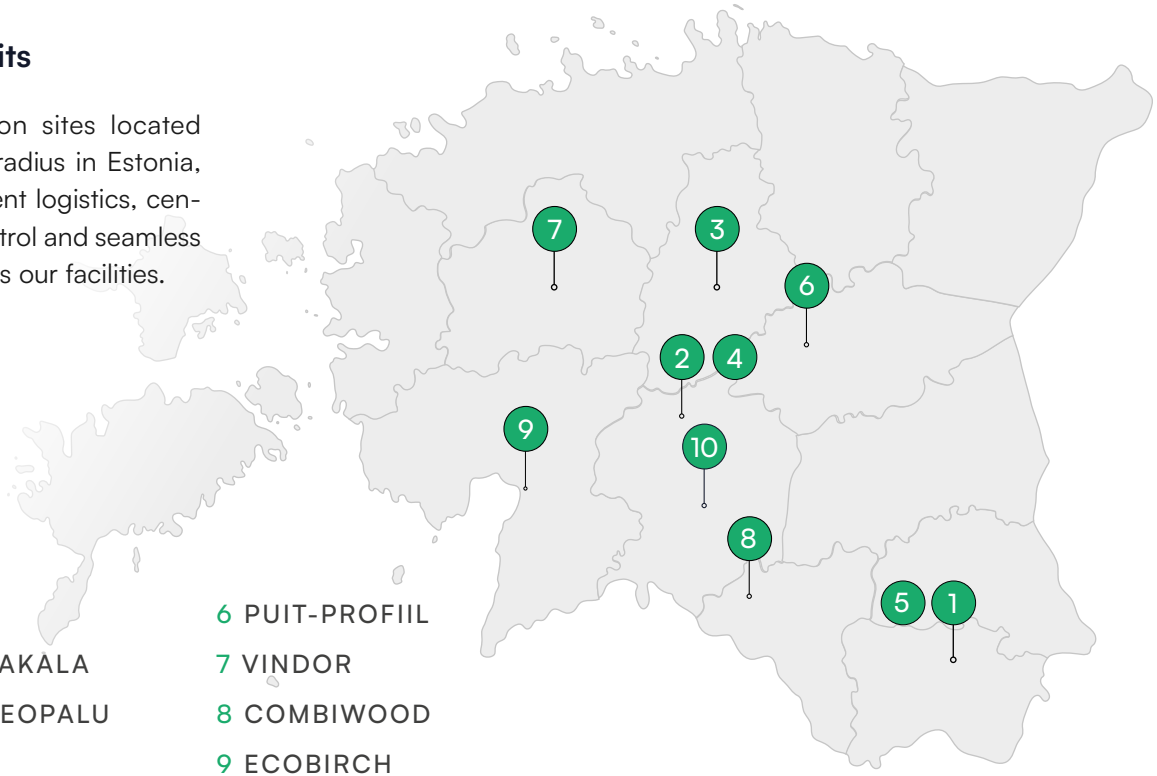

1 TOFTAN
2 COMBIMILL SAKALA
3 COMBIMILL REOPALU
4 VINCOM
5 VINCOM
6 PUIT-PROFIIL
7 VINDOR
8 COMBIWOOD
9 ECOBIRCH
10 LEIGOLA



Production capacity of finger-jointed components

170k

M^3 Group Total

Production capacity of glulam components

140k

M^3 Group Total





Standard or Tailored Timber Components

We offer a comprehensive range of timber components: finger-jointed and glulam beams, solid wood panels, pressure-treated components, and thermally treated wood.

Our wood components are primarily manufactured from pine and spruce, with various other species available (black alder, birch, and more). All products can be fully customised — from dimensions and machining to surface treatments and finishing.

Finger-Jointed Components

pine and spruce

Certified vertically or horizontally finger-jointed timber components. Can be tailored to meet specific requirements.

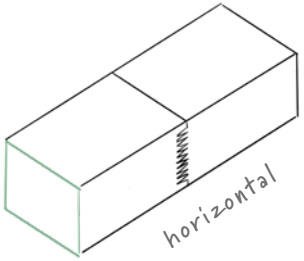

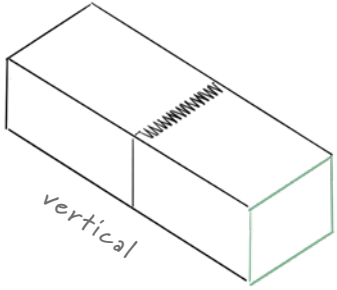

PRODUCTION CAPACITY

170,000 m³

PRODUCT RANGE

Defect Free
Knot-Free
Sound Knots
B/C grade — non-visible faces
Continuous Grain Structure

END-USE

Window sashes, frames, posts, skirtings
Door frames, jambs, posts, stiles, rails, thresholds
Mouldings & panelling
Furniture & fittings
Other applications

Specifications

THICKNESS
15-80 mm

WIDTH
up to 148 mm

LENGTH
Cut-to-length,
up to 7400 mm

FINGER-JOINTS
Horizontal 4/6 mm
Vertical 4/6 mm

SPECIES
Pine, Spruce

GLUES
D3, D4, EPI

QUALITY
A, B & C
*can be combined

MOISTURE CONTENT
10-12% +/- 2%

FINISHES
PAR, R2-R6
4F, G120/150

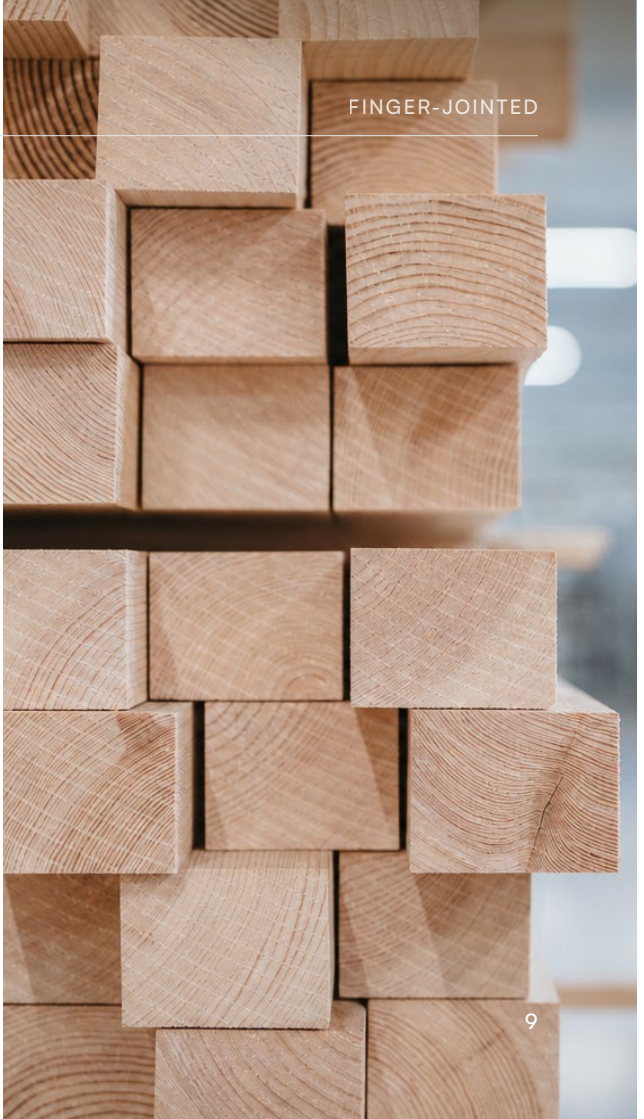

C24 Finger-Jointed Solid Component

/ pine and spruce

C24 graded structural components with vertical 10mm finger-jointing. Certified for load-bearing construction applications in accordance with **EVS-EN 15497:2014** standards.

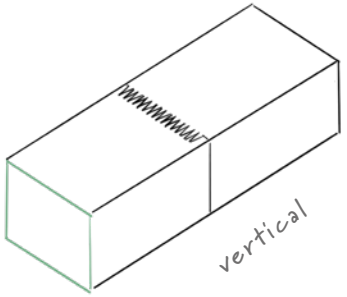

PRODUCT RANGE

C24

END-USE

Construction
Other applications

Specifications

THICKNESS
up to 45 mm

WIDTH
up to 145 mm

LENGTH
Cut-to-length,
up to 6000 mm

FINGER-JOINTS
Vertical
10 mm

SPECIES
Pine, Spruce

GLUES
EPI

QUALITY
C24

MOISTURE CONTENT
12-14% +/- 2%

FINISHES
PAR, R2-R6, 4F,
G120/150



Finger-Jointed Glued-Laminated Components

/ pine, spruce and alder

PRODUCTION CAPACITY

140,000 m³

Certified high-quality finger-jointed glulam timber components offering superior strength and dimensional stability. Can be tailored to meet specific requirements.

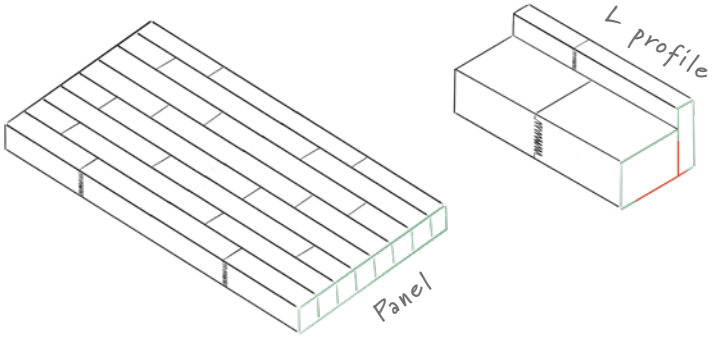

PRODUCT RANGE

Defect Free
Knot-Free
Sound Knots
B/C grade — non-visible faces
Continuous Grain Structure

END-USE

Window sashes, frames, posts, skirtings
Door frames, jambs, posts, stiles, rails, thresholds
Mouldings & panelling
Furniture & fittings
Other applications

Specifications

THICKNESS
15-200 mm

WIDTH
up to 1250 mm

LENGTH
Cut-to-length,
up to 6000 mm

FINGER-JOINTS
Horizontal 4/6 mm
Vertical 4/6 mm

SPECIES
Pine, Spruce, Alder

GLUES
D3, D4, EPI, PUR

QUALITY
A, B & C
*can be combined

MOISTURE CONTENT
10-12% +/- 2%

FINISHES
PAR, R2-R6, 4F,
G120/150

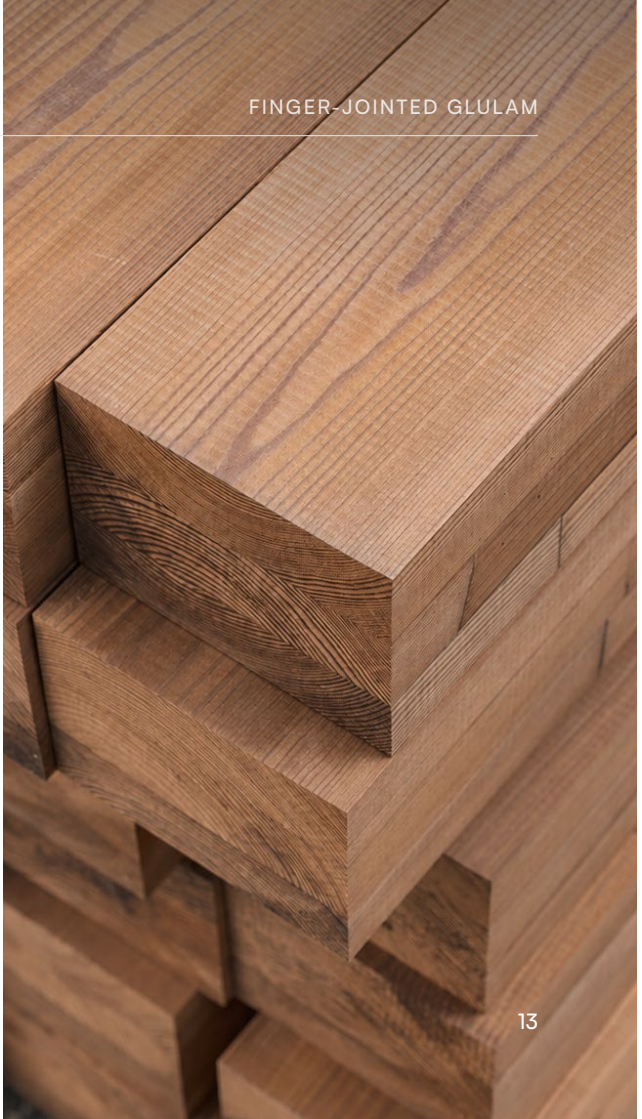

Solid Glued-Laminated Components

/ pine and spruce

Certified high-quality solid laminated timber components made from full-length lamellae. Offering natural appearance with superior strength. Can be tailored to meet specific requirements.

PRODUCTION CAPACITY

140,000 m³

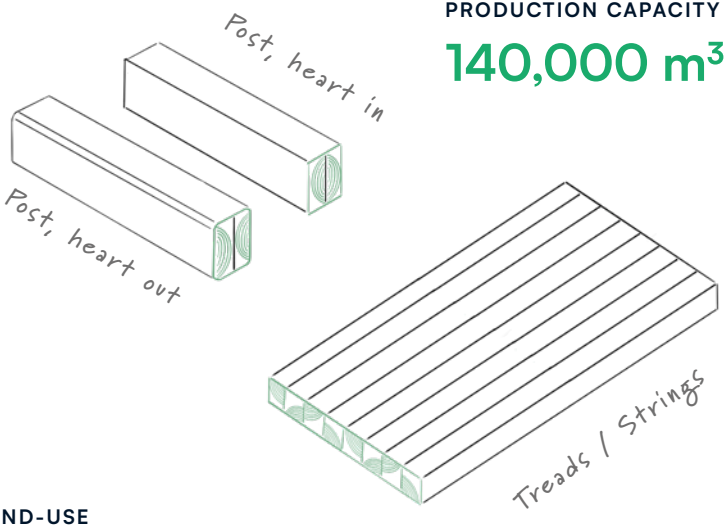

PRODUCT RANGE

Defect Free
Knot-Free
Sound Knots
B/C grade — non-visible faces
Continuous Grain Structure

END-USE

Window sashes, frames, posts, skirtings
Door frames, jambs, posts, stiles, rails, thresholds
Mouldings & panelling
Furniture & fittings
Other applications

Specifications

THICKNESS
15-200 mm

WIDTH
up to 1250 mm

LENGTH
Cut-to-length,
up to 5400 mm

GLUES
D3, D4,
PUR, EPI

SPECIES
Pine, Spruce

MOISTURE CONTENT
10-12% +/- 2%

QUALITY
A, B & C
*can be combined

FINISHES
PAR, R2-R6, 4F,
G120/150

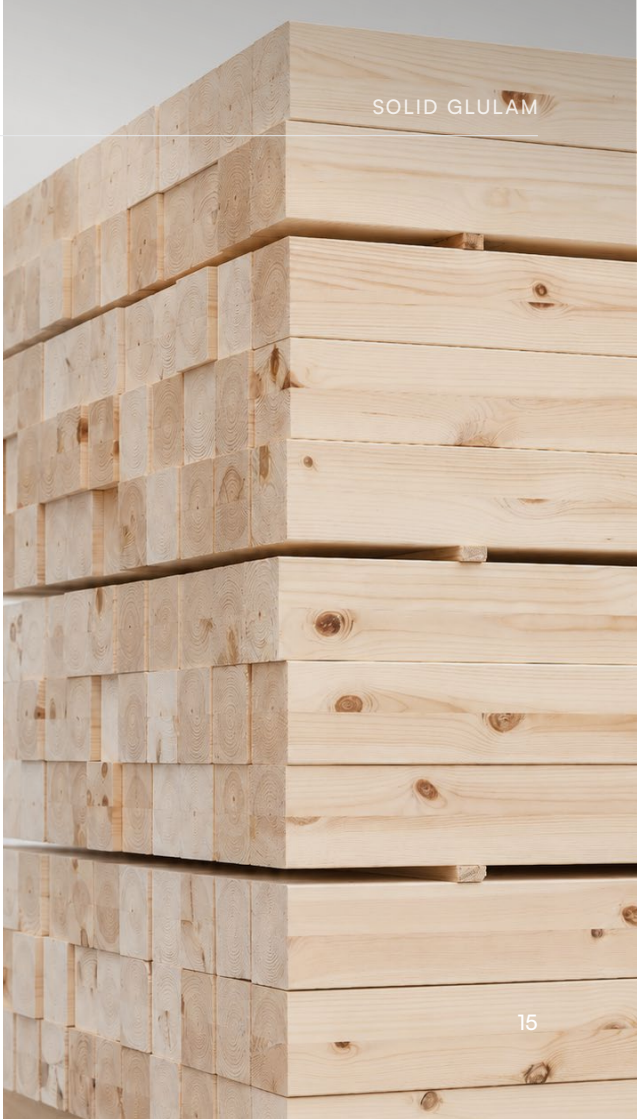

Non-Visible Construction Components

/ pine and spruce

High-quality finger-jointed glulam for hidden structural use. Can be tailored to meet specific requirements.

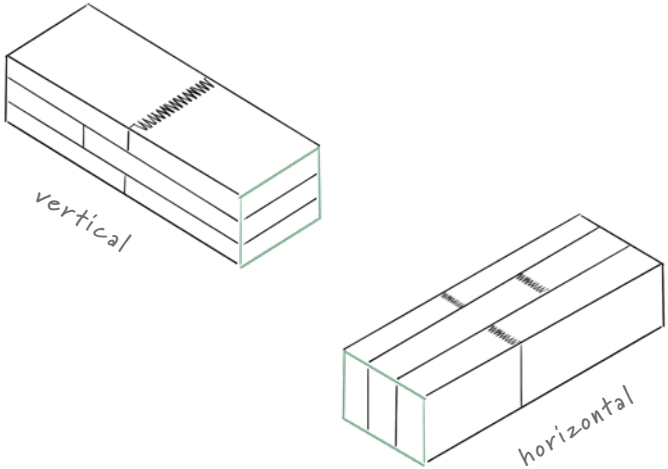

PRODUCT RANGE

Defect Free
Knot-Free
Sound Knots
B/C grade — non-visible faces
Continuous Grain Structure

END-USE

Window sashes, frames, posts, skirtings
Door frames, jambs, posts, stiles, rails, thresholds
Mouldings & panelling
Furniture & fittings
Other applications

Specifications

THICKNESS
18-200 mm

WIDTH
up to 1250 mm

LENGTH
Cut-to-length,
up to 6000 mm

FINGER-JOINTS
Horizontal 4/6 mm
Vertical 4/6 mm

SPECIES
Pine, Spruce

GLUES
D3, D4, EPI, PUR

QUALITY
A, B & C
*can be combined

MOISTURE CONTENT
10-12% +/- 2%

FINISHES
PAR, R2-R6, 4F,
G120/150

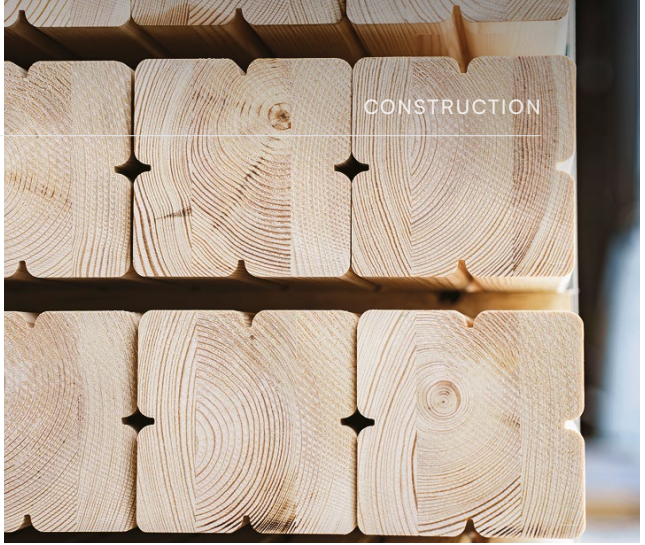



HDF Covered Components

/ pine and spruce

HDF-covered timber components with strong, smooth surface. Ideal for painting with excellent stability in varying conditions. Defect-free exterior for premium door frames. Can be tailored to meet specific requirements.

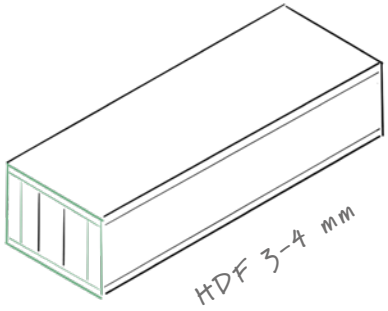

PRODUCT RANGE

Defect Free Outside

END-USE

Door Frames

Specifications

THICKNESS
32-70 mm

WIDTH
60-140 mm

LENGTH
Cut-to-length,
up to 2680 mm

HDF
3 mm
4 mm

SPECIES
Pine, Spruce

GLUES
D3, D4, EPI, PUR

QUALITY
A, B & C
*can be combined

MOISTURE CONTENT
6-9% +/- 2%





/ Pine, FJ



/ Pine, FJ



/ Pine, FJ



/ Spruce, FJ C24

Finger-Jointed Components



/ Pine, FJ



/ Pine, FJ



/ Pine, FJ

Solid or Finger-Jointed Glulam Components



/ Pine, Solid



/ Pine, Solid



/ Pine, Solid



/ Pine, FJ Glulam CNC



/ Pine, FJ Glulam



/ Pine, FJ Glulam CNC



/ Pine, FJ Glulam CNC
Pressure treated



/ Pine, FJ Glulam



/ Pine, FJ Glulam



/ Black Alder, FJ Glulam



/ Pine, FJ Glulam



/ Pine, FJ Glulam



/ Pine, FJ Glulam



/ Pine, FJ Glulam



/ Pine, FJ Glulam



/ Pine, HDF



/ Pine, FJ Glulam CNC



/ Pine, FJ Glulam
Thermo Treated



/ Pine, FJ Glulam
Thermo Treated



CONTACT SALES: COMPONENTS@COMBIWOOD.EE

Custom Solutions

We offer both standard components and custom solutions, designed to meet the demands of industrial applications.





ROBUSTLY FINISHED

Designed to withstand both indoor and outdoor conditions

END-TENONED PROFILES

Precision joints for strong and efficient assembly

PRE-PRIMED SOLUTIONS

Smooth and consistent, reducing finishing time

HIGH-PRECISION PROFILING

High-precision profiling for custom specifications



PROGRAMME FOR THE ENDORSEMENT OF FOREST CERTIFICATION

PEFC certification guarantees that wood is sourced from sustainably managed forests.

ENVIRONMENTAL PRODUCT DECLARATION

The EPD certificate confirms that our products have undergone a verified life cycle assessment.

SP CERTIFICATE

The SP Certificate, issued by RISE (Research Institutes of Sweden), confirms that our products meet high Nordic standards for performance, safety and durability.

FOREST STEWARDSHIP COUNCIL®

The FSC® certification guarantees that our wood comes from responsibly managed forests. It ensures environmental protection, social responsibility and sustainable economic practices throughout the supply chain.

PEFC

FSC
www.fsc.org
FSC® C109673

EPD®
THE INTERNATIONAL EPD® SYSTEM

NOTES

COMBIWOOD GROUP

Sales Contact

Email: components@combiwood.ee
Phone: +372 53 655 986

VINCOM OÜ

Olustvere tee 17, Kõidama,
71504, Estonia

About the Factory

AS PUIT-PROFIIL

Julius Kuperjanovi 16,
Põltsamaa, 48105, Estonia

About the Factory

AS ECOBIRCH

Niidu 11, Pärnu,
80010, Estonia

About the Factory